Part 1: Simulation

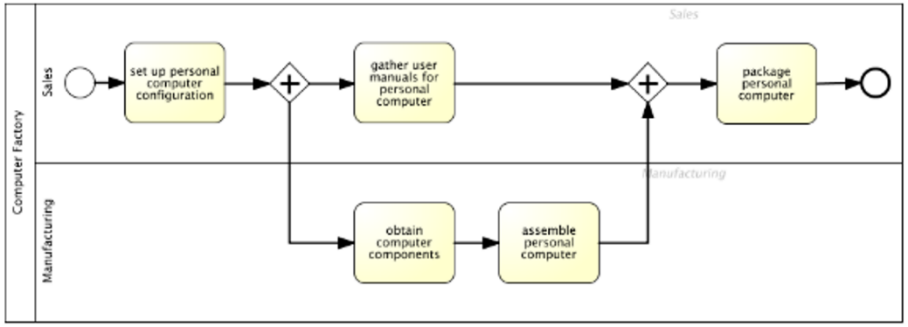

A) How much time does one process instance take? (1 point)
[Write the equation used. (1 point)]

Answer: b) 2 hr 5 min
Equation:

$$25\ min + MAX[50\ min,\ \ (25\ \text{min}\ +60\ min)] + 15\ min = \frac{125\ min}{60} = \ 2\ hr\ 5\ min$$

B) What is the overall cost of one process instance?
Remark: The cost calculation of the process differs from the processing time calculation.
You need to include all costs with their relative employee cost. (1 point) [Write the equation used. (1 point)]

Answer: c) 101.67 LE
Equation:

∵ Hourly wages Employee in Sales: 30LE, Hourly wages Employee in Manufacturing: 40 LE.

$$\therefore \text{The overall cost} = \left[\frac{25\ min}{60} \times 30\right] + \left[\frac{50\ min}{60} \times 30\right] + \left[\frac{15\ min}{60} \times 30\right] + \left[\frac{25\ min}{60} \times 40\right] + \left[\frac{60\ min}{60} \times 40\right] = \ 101.67\ LE$$

Part 2: Soundness

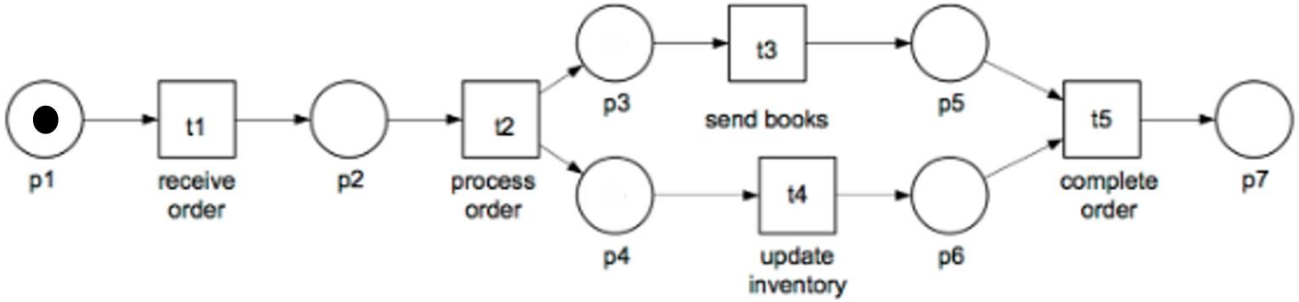

1)

a) Draw the reachability graph, initial marking M0={P1} (2 points)

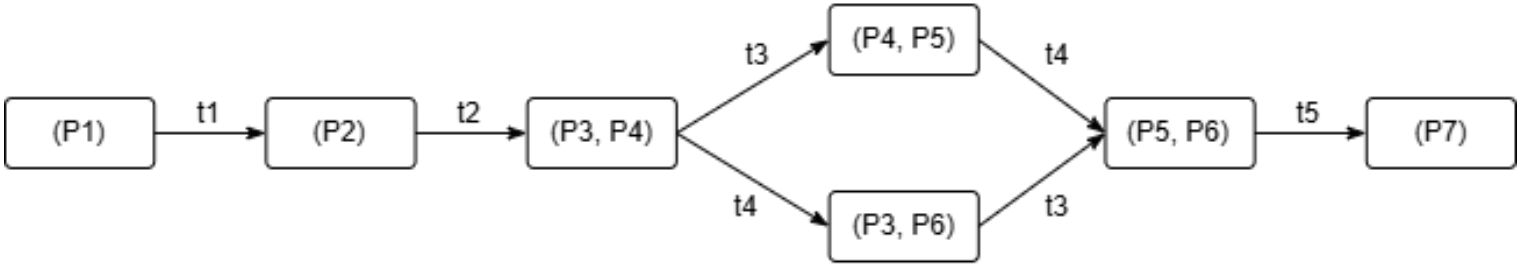

b) Based on the answer to the previous question, the model is: (1 point)

a. Soundness

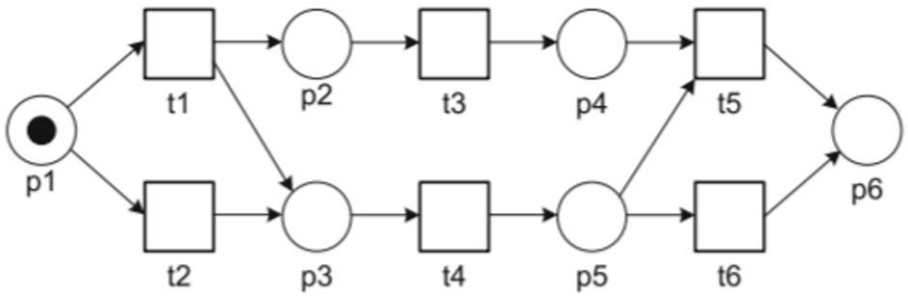

2)

a) Draw the reachability graph, initial marking M0={P1} (2 points)

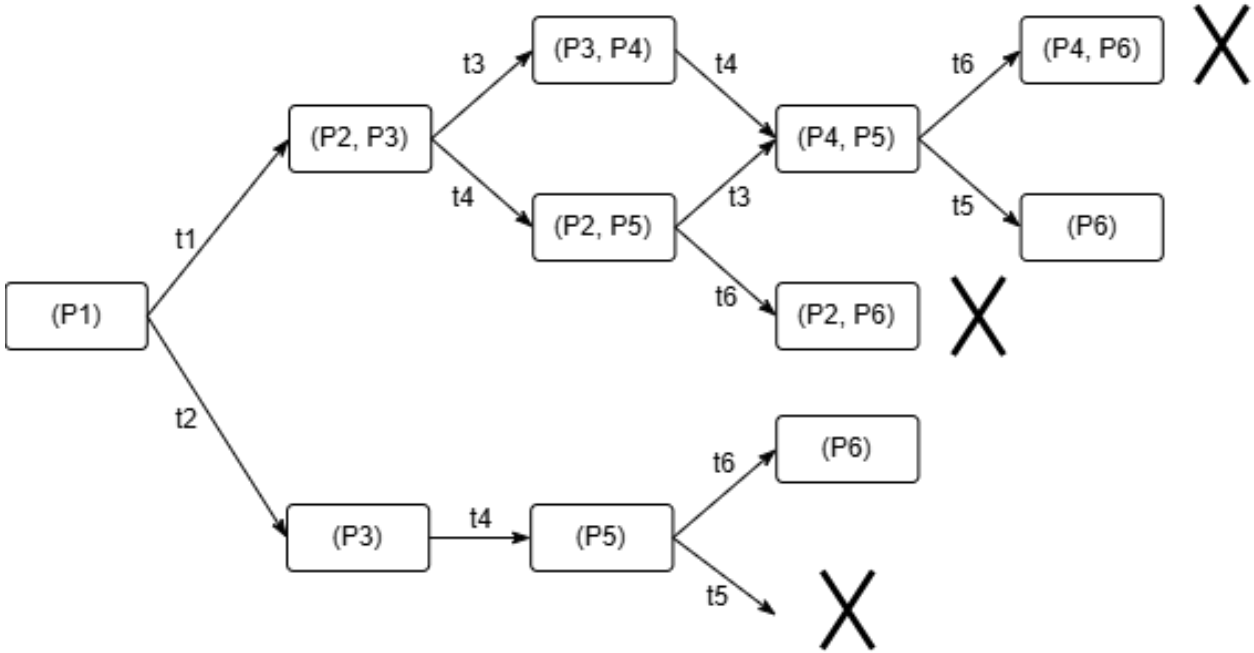

b) Based on the answer to the previous question, the model is: (1 point)

b. Not sound. Remaining token in Place P4.